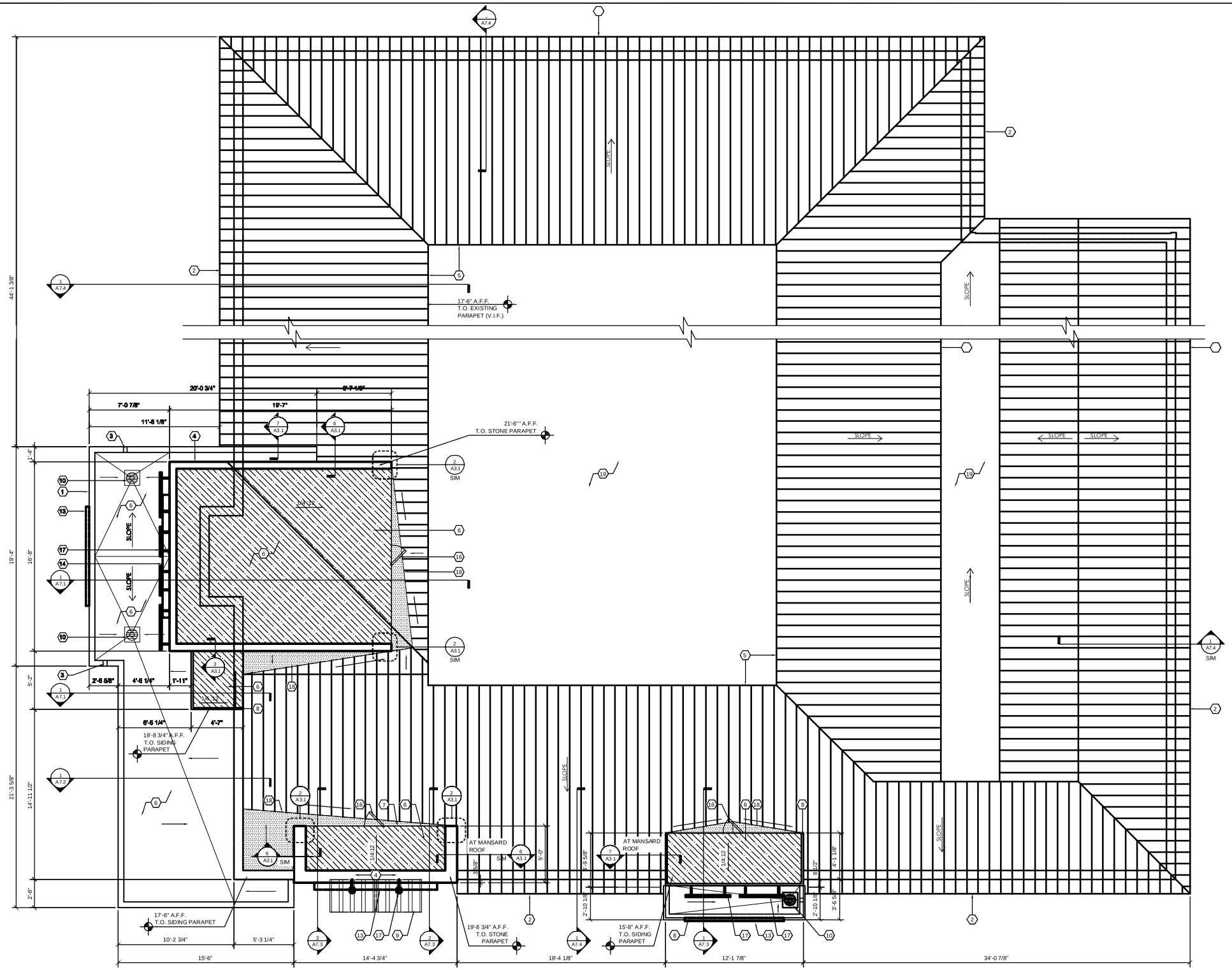

1 ROOF PLAN
1/4"=1'-0"

GENERAL NOTES

A. PRIOR TO ORDERING GLU-LAM RAFTER LENGTHS, GENERAL CONTRACTOR TO VERIFY THAT NEW PORCH DEPTH DIMENSIONS COORDINATE WITH EXISTING FIELD DIMENSIONS. WHERE LEAD TIME FOR DELIVERY IS CRITICAL, ORDER RAFTERS LONG TO ENSURE ADEQUATE LENGTH. NOTIFY ARCHITECT OF ANY DISCREPANCIES BETWEEN SITE DIMENSIONS AND WHAT IS SHOWN ON DRAWINGS.

B. DURO-LAST IS THE PREFERRED ROOF MEMBRANE MANUFACTURER, UNLESS CURRENT ROOF ASSEMBLY IS UNDER WARRANTY. IF UNDER WARRANTY, GENERAL CONTRACTOR IS TO UTILIZE THE CURRENT ROOF ASSEMBLY VENDORS AND MATCH EXISTING MEMBRANE MANUFACTURER AS REQUIRED TO MAINTAIN WARRANTY. GENERAL CONTRACTOR TO CONTACT CPM REGARDING ROOF WARRANTY INFORMATION. REFERENCE SPECIFICATIONS SECTION 075300.

C. TREMCO "DYMERIC 240FC" HIGH PERFORMANCE MULTI-COMPONENT POLYURETHANE SEALANT TO BE USED AS SEALANT. REFERENCE CAULKING COLOR SELECTION CHART ON SHEET A4.1 AND SPECIFICATIONS SECTION 079200 FOR ADDITIONAL INFORMATION. COLORS INDICATED ON SELECTION CHART TAKE PRECEDENCE OVER ANY PLAN DISCREPANCIES.

ROOF PLAN KEYED NOTES

1. NEW BLADE ROOF; PAINT TO MATCH BERRIDGE " COPPER BROWN ". REFERENCE ELEVATION SHEETS, STRUCTURAL SHEETS & DETAILS ON A7 SHEETS FOR ADDITIONAL INFORMATION.
2. EXISTING METAL ROOF TO REMAIN. PREP AND CLEAN AS REQUIRED TO RECEIVE NEW PAINT (RP-1). REFERENCE SHEETS A4.1, A4.2 AND SPECIFICATION SHEETS FOR ADDITIONAL INFORMATION. GENERAL CONTRACTOR TO PROVIDE ALTERNATE BID FOR REPLACING ENTIRE METAL ROOF WITH NEW (MR-1) IN LIEU OF PAINTING EXISTING.
3. NEW DURO-LAST PRE-FABRICATED THRU-WALL SCUPPER. INSTALL PER MANUFACTURER'S SPECIFICATIONS. REFERENCE DETAIL 8/A3.2 FOR ADDITIONAL INFORMATION.
4. NEW METAL COPING. REFERENCE DETAIL 5/A3.1, SHEETS A4.1 & A4.2, AND SPECIFICATION SHEETS FOR ADDITIONAL INFORMATION.
5. EXISTING PARAPET AND METAL COPING TO REMAIN; PAINT COPING (RP-1). REFERENCE SHEET A4.1 FOR ADDITIONAL INFORMATION. GENERAL CONTRACTOR TO PROVIDE ALTERNATE BID FOR PROVIDING NEW METAL COPING (MC-1) IN LIEU OF PAINTING EXISTING.
6. NEW DURO-LAST SINGLE PLY ROOF MEMBRANE (RM-1), UNLESS NOTED OTHERWISE (REFERENCE GENERAL NOTE "B" THIS SHEET). RUN CONTINUOUS OVER NEW PARAPET FRAMING AND UP AND UNDER NEW COPING. TIE INTO EXISTING ROOF SYSTEM AS REQUIRED PER MANUFACTURER'S STANDARD SPECIFICATIONS & DETAILS. REFERENCE SPECIFICATIONS SECTION 075300. USE "WHITE" UP TO 6" BELOW HEIGHT OF EXISTING PARAPET AND "TERRA COTTA" COLOR ABOVE.
7.
8. NEW CONTINUOUS METAL FLASHING WITH DRIP EDGE. REFERENCE FINISH TAGS AND EXTERIOR FINISH SCHEDULE ON SHEET A4.1 FOR COLOR SCHEME.
9. NEW CANVAS COVERED METAL FRAMED AWNINGS TO BE SUPPLIED BY THE GENERAL CONTRACTOR. AWNING VENDOR / SUB-CONTRACTOR TO PROVIDE SHOP DRAWINGS AND STRUCTURAL CALCULATIONS FOR PLAN REVIEW. DOCUMENTS MUST BE APPROVED PRIOR TO INSTALLATION. REFERENCE DETAILS 6 & 7/A7.3 FOR ADDITIONAL INFORMATION.
10. NEW ROOF DRAIN (JAY R. SMITH MFG. CO - SIPHONIC ROOF DRAIN) ROUTE OUT BOTTOM OF NEW BUILD-OUT BELOW VIA DOWNSPOUT NOZZLE (JAY R. SMITH MFG. CO - FIG. 1770) AS REQUIRED. INSTALL PER MANUFACTURER'S SPECIFICATIONS. REFERENCE DETAIL 4/A7.1
11.
12.
13. NEW SIGN BY SIGN CONTRACTOR.
14. "NEW STYLE" SIGN TYPICALLY EXISTING ON FRONT. SIGNAGE CONTRACTOR TO REINSTALL ON NEW FACADE, SEE 1/A4.1. BBFS CM TO CONFIRM SIZE OF EXISTING SIGN MEETS WITH NEW DESIGN INTENT.
15.
16. 22" x 36" WEATHER RESISTANT FLUSH ACCESS PANEL (INSULATED) FOR MAINTENANCE AS REQUIRED; JL INDUSTRIES, MODEL # XPA-2236H; REFERENCE DETAIL 1/A7.1
17. NEW LIGHT FIXTURE; REFERENCE SHEETS A4.1, A4.2 AND ELECTRICAL SHEETS FOR ADDITIONAL INFORMATION.
18. NEW PRE-FINISHED SHEET METAL CRICKET TO MATCH STANDING SEAM METAL ROOFING.
19. EXISTING ROOF DRAINS TO REMAIN. CLEAN ALL STRAINERS OF ANY DEBRIS AS REQUIRED.
20.
201. PATCH AND REPAIR FASCIA AND GABLE ROOF FRAMING AS REQUIRED AFTER REMOVAL OF ORIGINAL FRONT PORCH GABLE ROOF STRUCTURE. FLASH TO NEW CONSTRUCTION AS REQUIRED. CLOSE EXPOSED ENDS WITH HARDI-PANEL AND PAINT TO MATCH FASCIA. SEE SHEET A4.1.

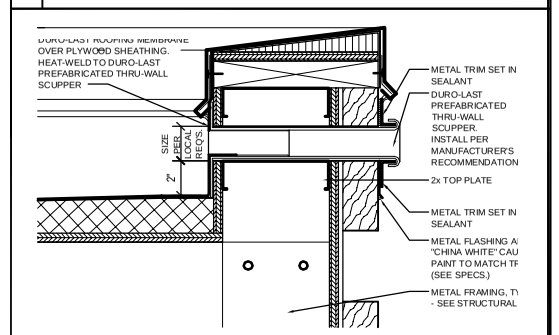

8 SCUPPER DETAIL
1 1/2"=1'-0"

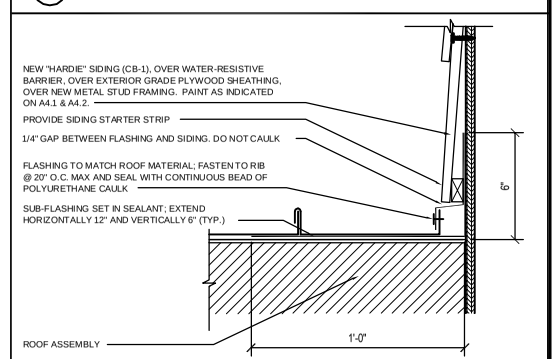

7 SIDING TO METAL ROOF DETAIL
3"=1'-0"

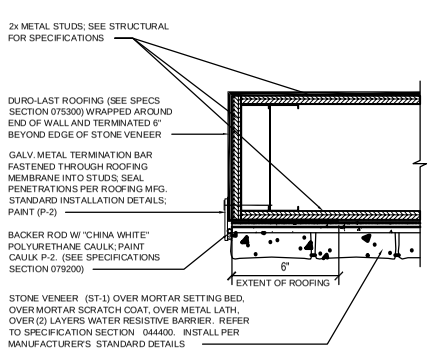

2 STONE PARAPET TERMINATION PLAN
3"=1'-0"

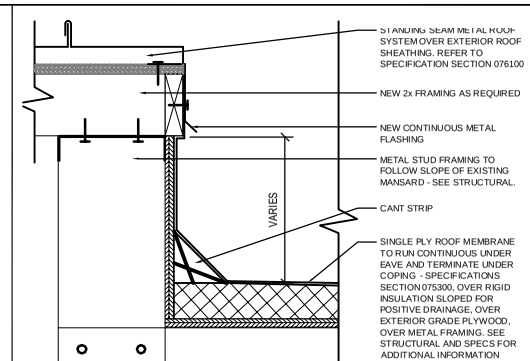

3 FLASHING DETAIL @ EAVE
3"=1'-0"

4 NOT USED
1 1/2"=1'-0"

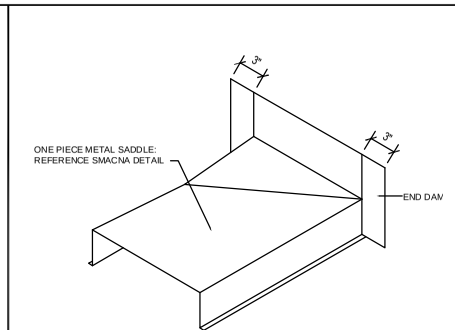

5 SADDLE COPING ISOMETRIC
1 1/2"=1'-0"

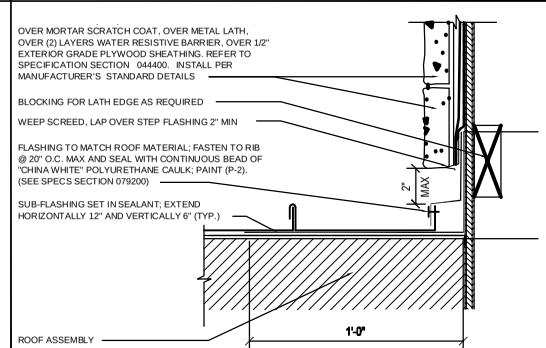

6 STONE TO METAL ROOF DETAIL
3"=1'-0"

REVISION	REMARKS	BY	DAT

I certify that these drawings were prepared or approved by me, and that I am a duly licensed architect under the laws of the State of Ohio.
License number: 14181R2
Expiration Date: December 31, 2017

Michael J. DeVere
Architect
111 One Hill Drive
Tryon, North Carolina 28782
(828) 817-0763

PROJECT: 15-9-125

3652 CINCINNATI, OH
(KENWOOD)
8240 MONTGOMERY ROAD

OUTBACK STEAKHOUSE

PROTOTYPE:	1M SERIES
DPM: TM	DRAWN BY: MJD
STORE NUMBER: 3652	CHECKED BY: ---
ISSUE DATE: 01/11/2016	

SHEET NUMBER
A3.1
ROOF PLAN